MONOCHORD

Name of the object	Monochord
Recommended ages (from…)	From 14 years old
Thematic areas combined (STEAM)	Science Technology Engineering Art Mathematics
Materials needed	• 1 solid wood strip (fir, beech or ash) 8 x 120 cm - thickness 2 cm • 1 wooden triangle bar 4 x 4 cm - length 20 cm (or wedges) • 1 guitar string of 150 cm • 1 nail with eyelet • 1 screw piton or rider nail • Wood glue • Hammer, saw, tape measure, sanding paper • An application for tuning • 3D printer with PLA
Instructions step by step	**Step 1**. Gather the material and read the instructions. **Step 2**. Prepare the pieces of wood - sand and glue the wooden triangle bar to the strip. **Step 3**. Record fractions on the strip. **Step 4**. Attach the guitar string and tune it. **Total duration:** **40 min**

Step by step: how to build the monochord

Step 1

Time needed: 10 minutes.

Gather the material and read the instructions.

All the pieces ready to use.

Observe the entire construction scheme:

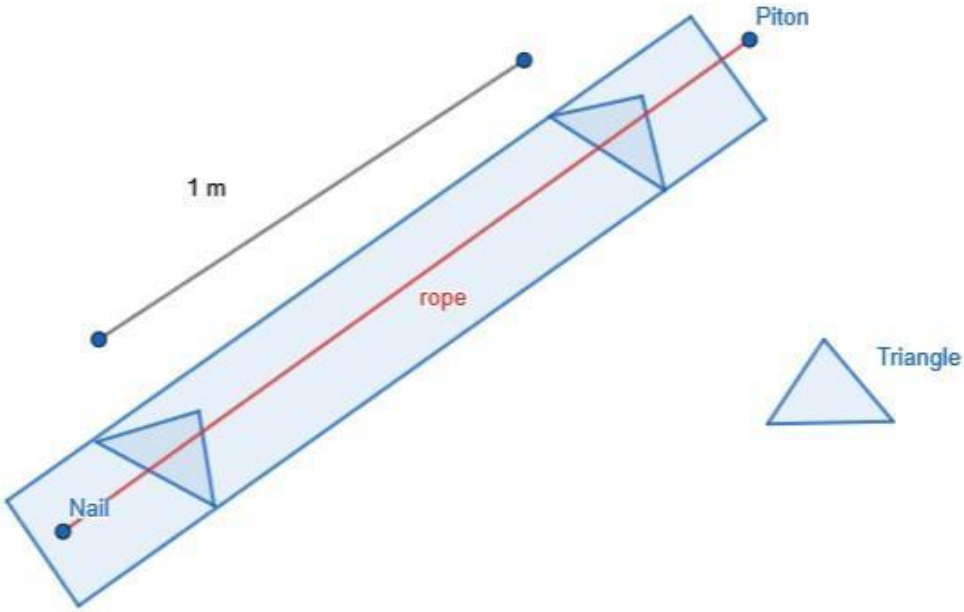

Step 2

Time needed: 10 minutes

Prepare the pieces of wood - sand and glue the wooden triangle bar to the strip

- Using sanding paper, sand down all the pieces of wood.

- Cut the wooden triangle bar with the saw into 2 identical pieces of 8 cm length (T1 and T2) and 1 piece of 4 cm (T3).

- Glue 2 of the designed identical pieces (or the two wedges) to the wooden batten as shown in the diagram below - the tops of the pieces should be 100 cm apart.
Keep the third piece aside as it will be movable.

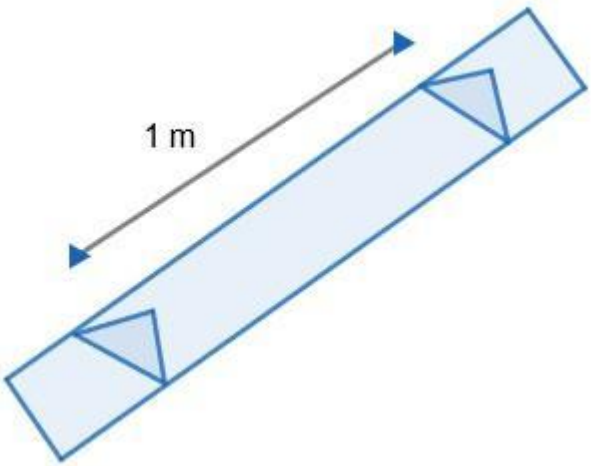

Step 3

Time needed: 10 minutes

Record fractions on the strip

- On the wooden strip, record the following fractions: ½, ¾ and 2/3

Step 4

Time needed: 10 minutes

Attaching the guitar string and tuning it

- Position the guitar string in the nail eyelet (or with the rider nail) and nail it 5 cm to the left of the triangular cleat T1.

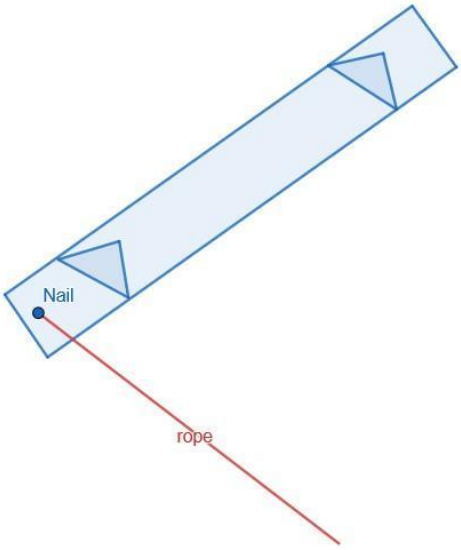

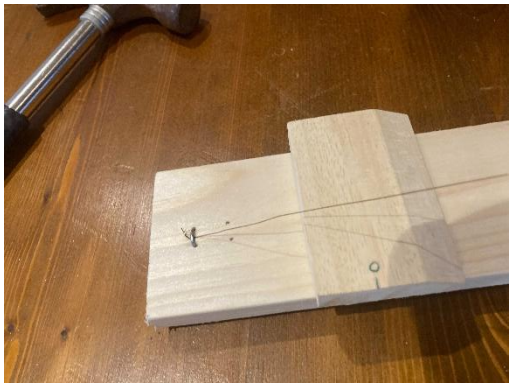

- Attach the other end of the rope to the screw piton. Screw it 5 cm to the right of the triangular cleat T2.

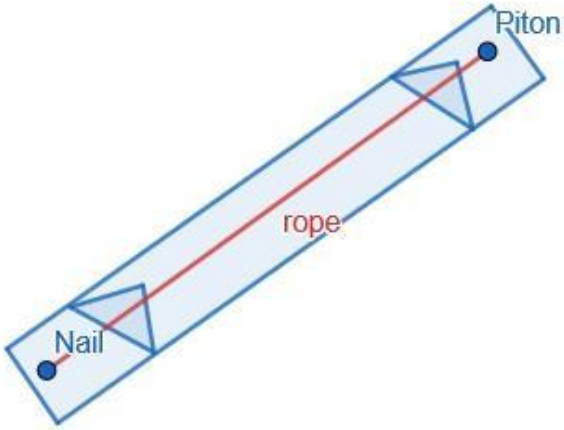

This screw piton allows the guitar string to be tensioned and relaxed in order to tune it.

Here in the photo, we have used a wooden spacer and not a wooden triangle.

- Tuning the string to a note.

To be able to tune the string, on a DO for example, and if you don't have a tuner, we suggest you download the Guitar Tuna application with your smart phone.

iOS : https://apps.apple.com/fr/app/guitartuna-guitar-bass-tuner/id527588389

Android : https://play.google.com/store/apps/details?id=com.ovelin.guitartuna&hl=fr

- To strum the guitar, it is possible to print a guitar pick using a 3D printer:

Here you can find plans for printing: https://cults3d.com/fr/mod%C3%A8le-3d/divers/guitar-pick

Resources

http://irem.univ-poitiers.fr/portail/attachments/article/207/Plan_monocorde.pdf